SS1B31

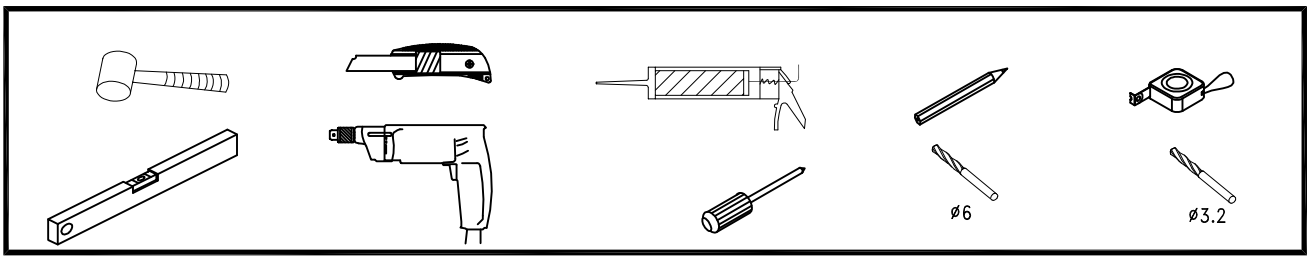

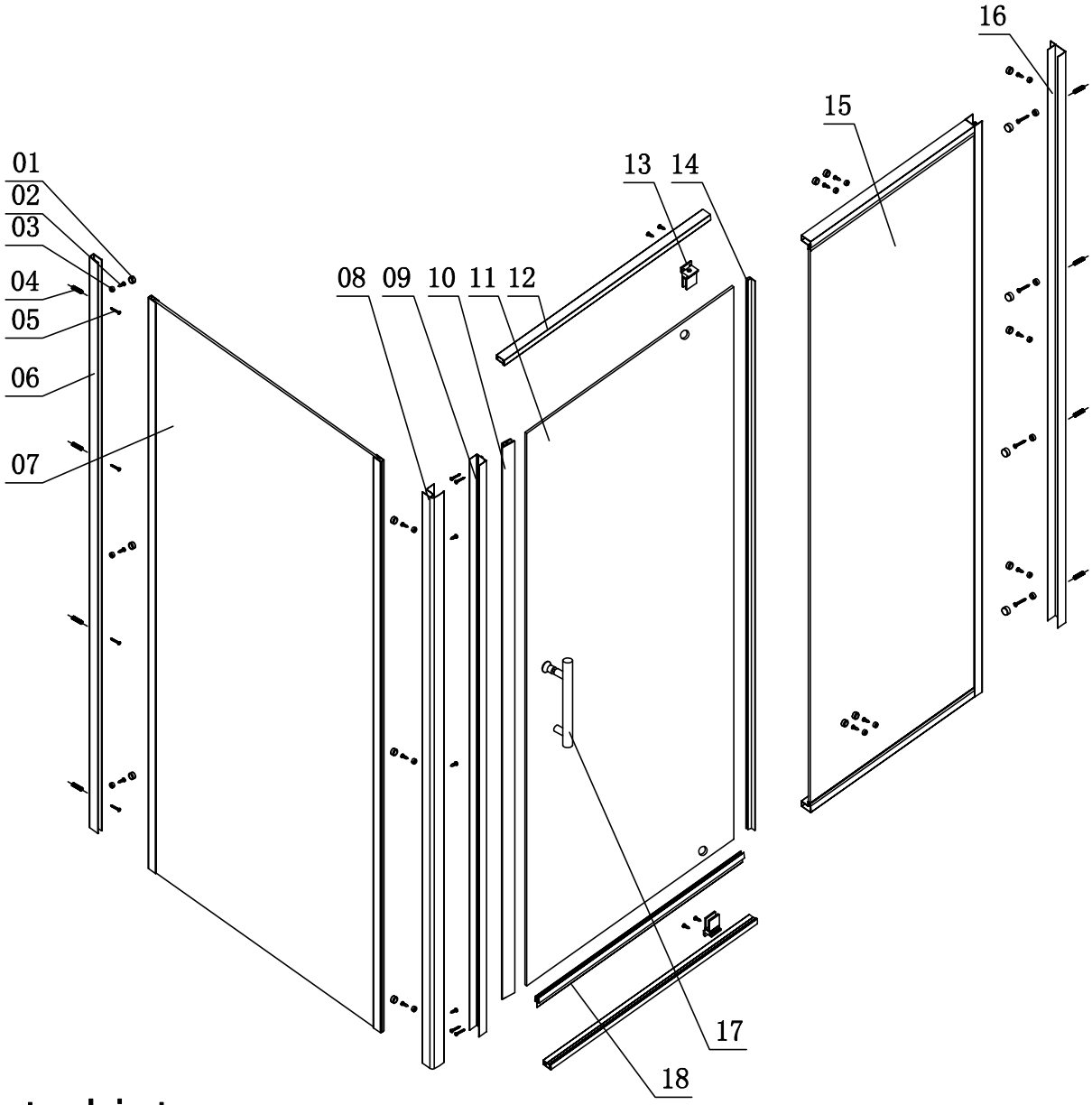

Parts List

01 17PCS	02 ST4*12 20PCS	03 17PCS	04 8PCS	05 ST4*25 12PCS
06 1PCS	08 1PCS	09 1PCS	10 1PCS	12 2PCS
13 2PCS	14 1PCS	16 1PCS	17 1PCS	18 1PCS

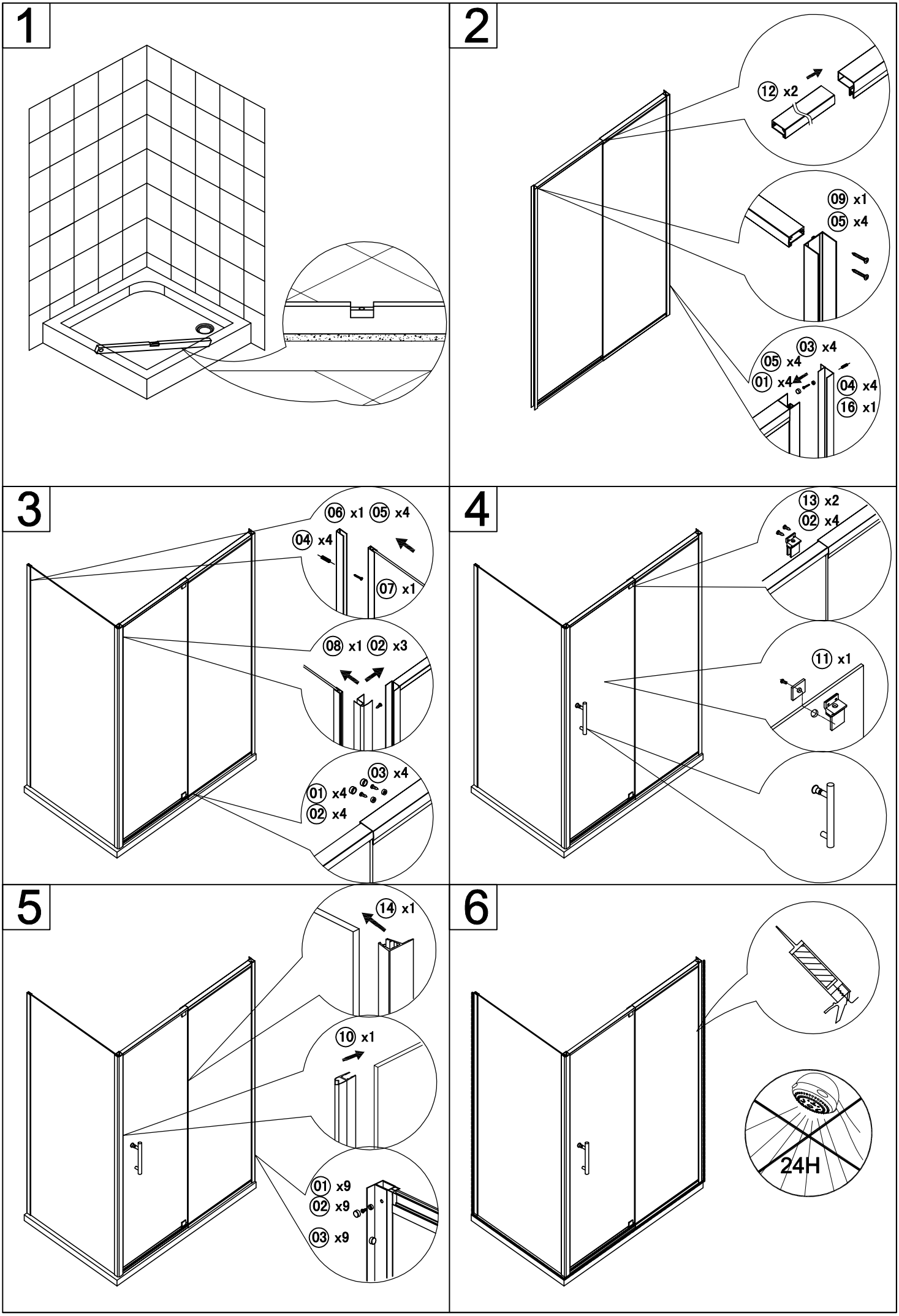
1
2
12 x2
09 x1
05 x4
03 x4
05 x4
01 x4
04 x4
16 x1
3
06 x1 05 x4
04 x4
07 x1
08 x1 02 x3
03 x4
01 x4
02 x4
4
13 x2
02 x4
11 x1
5
14 x1
10 x1
01 x9
02 x9
03 x9
6
24H