Lincoln

HAND SHOWER

SOFT SQUARE PLATE

Features

- Designed to complement the shower or bath
- All-in-one water inlet and mounting bracket
- Tilt function
- Made from solid brass
- 1.5 metre stainless steel flexible hose (PVC on matte black model)
- **WELS 3 Star rated, 9L/min**

LINCOLN Hand Piece (MSH001B):

- Single water flow setting
- Made from solid brass with ABS faceplate

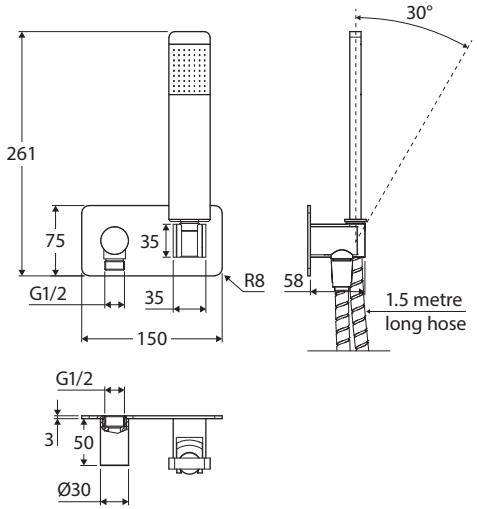

Available in

Electroplated
Matte Black
433111MB

Cleaning & Care

- Regularly clean with mild soapy water using a microfibre cloth.
- In highly polluted or coastal locations, we recommend cleaning 2-3 times per week.
- Do not use harsh detergents, bleach, cream cleaners or citrus based cleaners. These substances are abrasive and will damage the surface.
- Do not use undue pressure and wipe in one direction only.

WaterMark

The more stars the more water efficient.
WATER RATING
www.waterrating.gov.au
9.0 litres per minute
In accordance with AS/NZS 6400
Licence No. 0252
Fienza

We aim to ensure that specifications are correct at the time of publication. All measurements are shown in millimetres. Always use measurements of actual product received for final specification as the technical drawing may contain differences.
Due to printing limitations, physical colour may vary from the image shown. Fienza reserves the right to make modifications without prior notice.