Valentina LED

FRAMED MIRROR 600 X 900MM

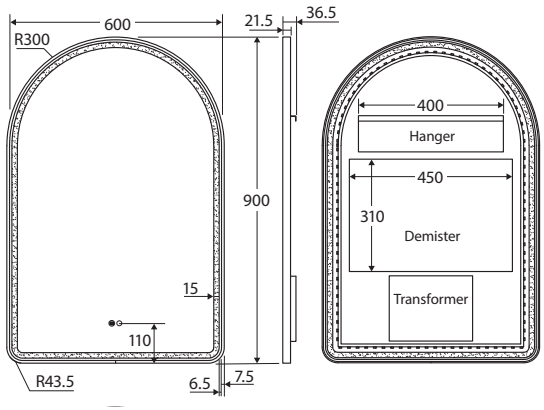

Features

- Adjustable colour temperature (6000, 4000 and 3000K)
- Built-in demister
- Illuminating touch sensor for light and demister
- 5mm thick glass mirror with frosted lighting
- Aluminium frame – powder-coated matte black, anodised urban brass and brushed copper finishes
- Copper-free mirror to prevent corrosion
- Includes wall mounting screws and anchor plugs
- Supplied in extra strong packaging for added protection
- 220-240V AC 50/60Hz
- IP44 rating

Available in

Matte Black
LED6090FAB

Urban Brass
LED6090FAUB

Brushed Copper
LED6090FACO

Adjustable Colour Temperature

Cleaning & Care

Glass Mirror:
For best results, clean mirrors with a combination of 30% methylated spirits to 70% water and a soft, non-abrasive cloth designed for use on glass surfaces.

Frame:

- Regularly clean with mild soapy water using a microfibre cloth.
- In highly polluted or coastal locations, we recommend cleaning 2-3 times per week.
- Do not use harsh detergents, bleach, cream cleaners or citrus based cleaners. These substances are abrasive and will damage the surface.
- Do not use undue pressure and wipe in one direction only.

We aim to ensure that specifications are correct at the time of publication. All measurements are shown in millimetres. Always use measurements of actual product received for final specification as the technical drawing may contain differences.
Due to printing limitations, physical colour may vary from the image shown. Fienza reserves the right to make modifications without prior notice.